Using Data Structures to Model Mobile Cellular Users and Base Stations

This Discrete Event model of the access engineering function for a Mobile/Cellular Telephone System demonstrates creative use of data structures. In this simulation model data structures represent both the Base Stations and the Mobile Units. The data structures are created, stored in memory and then read/updated on each polling cycle.

The Base Station data structure carries fields defining the Base Station ID, the x and y coordinates of the base station, the total channels available and the current number of channels in use.

The Mobile User data structure carries fields defining the Mobile User ID, the current x and y coordinates, current and last Base Station IDs, distance to current Base Station, channel availability, direction, speed, session length, time to exit and total number of handoffs.

The top-level model is shown below.

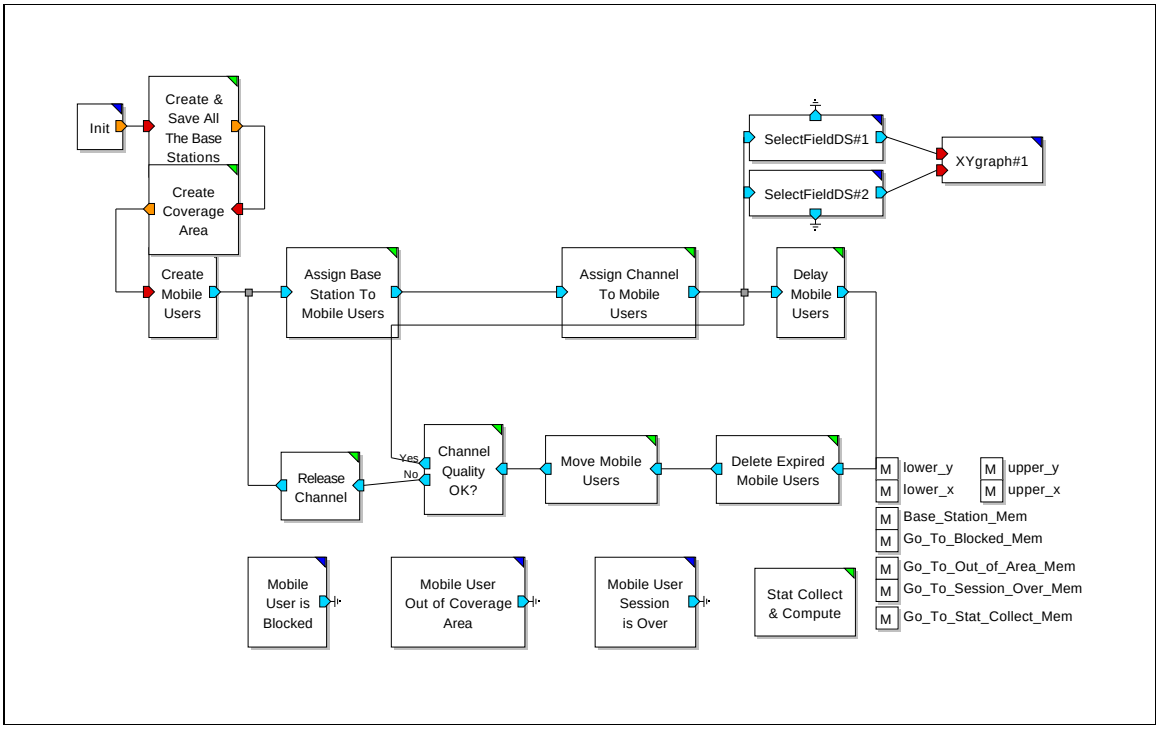

Figure 1: Mobile Cellular top-level module

The module below creates and saves all the Base Stations based on parameters defining coverage area, the distance between Base Stations, and the location of the first base station.

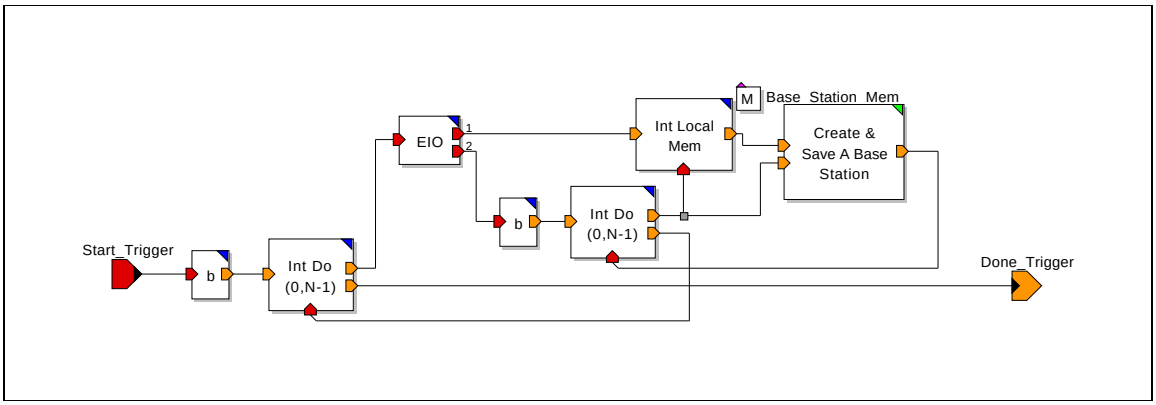

Figure 3: Create base staions module

Parameters also define the number of channels per Base Station. The Base Station data structures have been created, they are all in a memory where they can be accessed during execution.

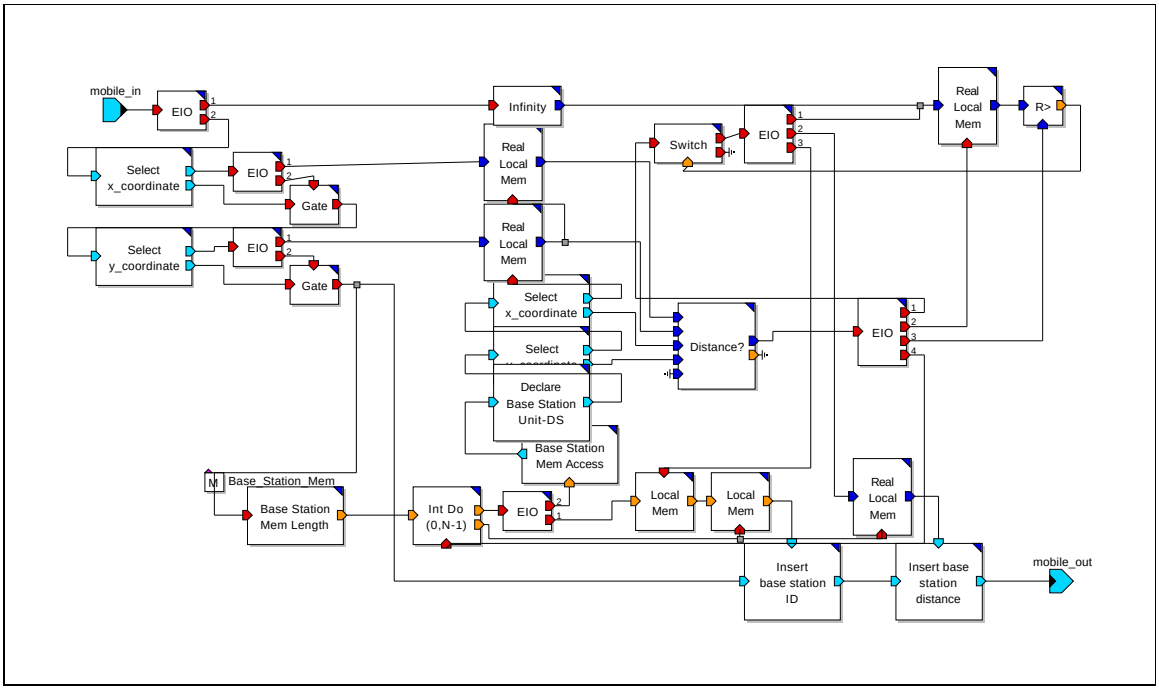

Figure 4: Create users module

The module above creates the Mobile Users. The Mobile Users are generated randomly and uniformly within the coverage area and a session length is assigned. The closest Base Station to the Mobile User is selected to serve the user; then an available channel of this Base Station is assigned to the Mobile User.

The next module assigns the Base Stations to the Mobile Users.

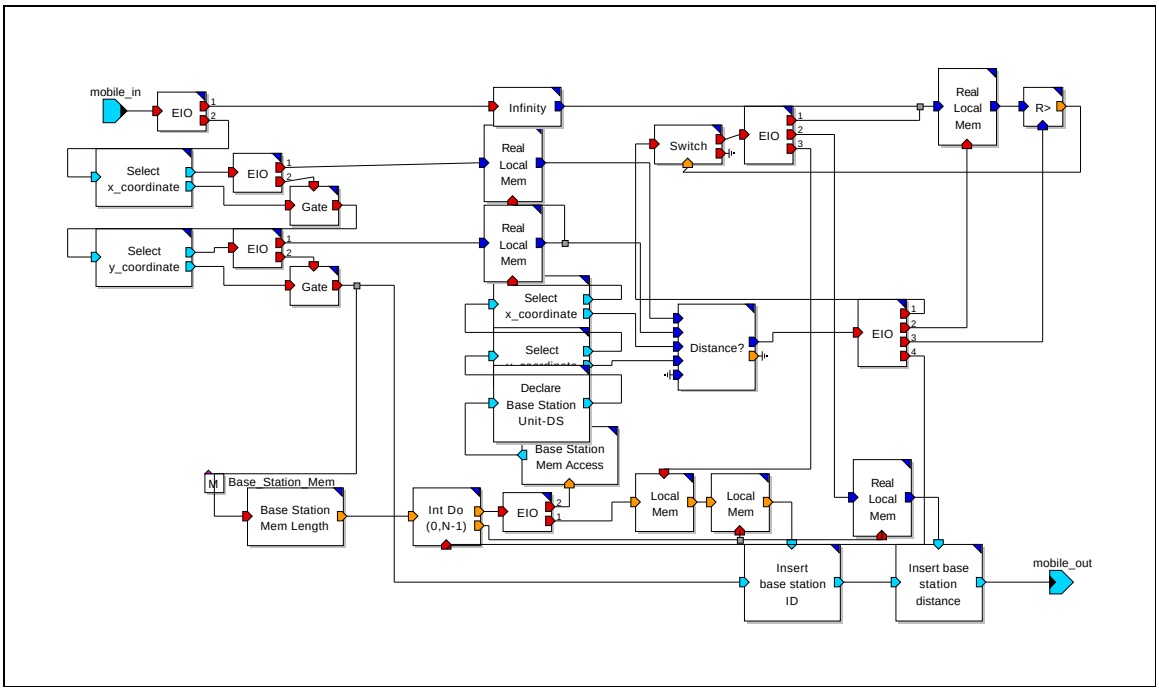

Figure 5: Assign base stations

The module below checks Base Stations for available channels. If there is an available channel, it is assigned to the Mobile User; if not the Mobile User exits.

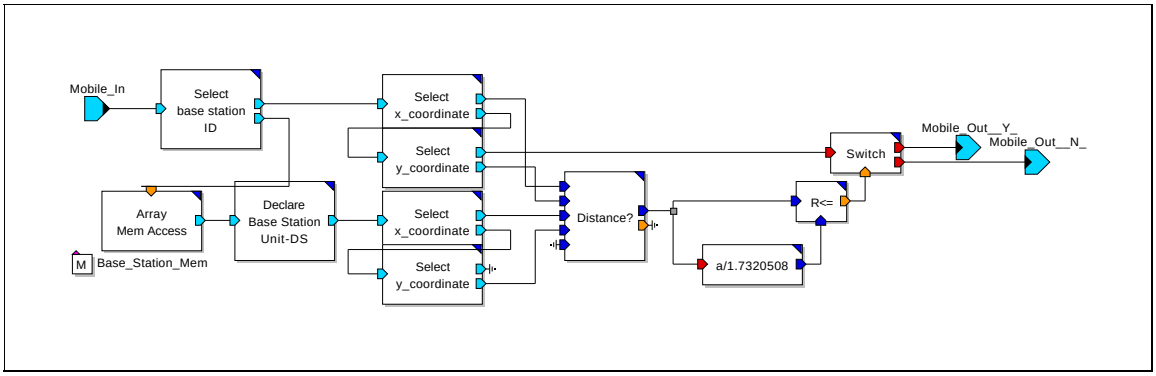

Figure 6: Check channel quality module

Mobile Users are polled at specified time intervals. The module below calculates new positions for each Mobile User at each polling interval, based on specified speed and direction parameters.

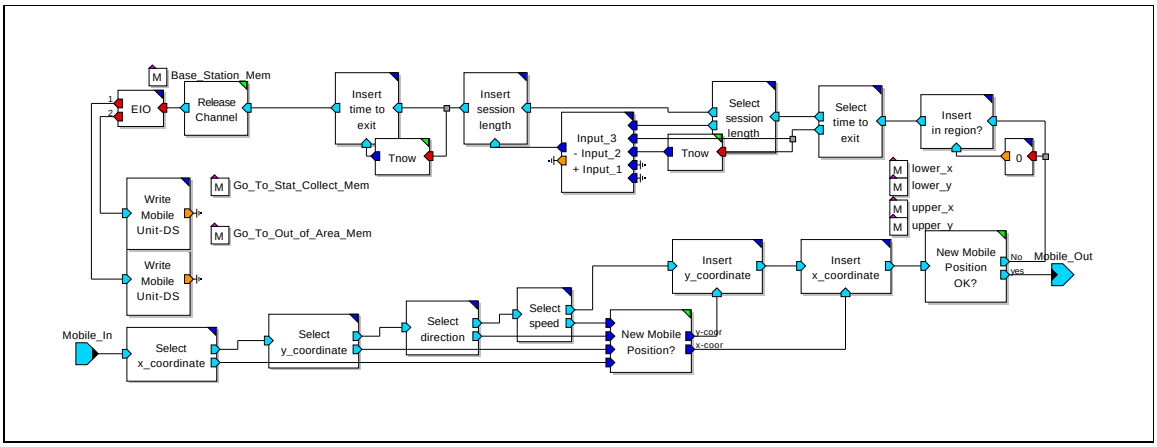

Figure 7: Move mobile users module

If the Mobile User's session is over, it is dropped from the system; otherwise a new location is computed. If the new location is outside the coverage area, the Mobile User is considered unserviceable and it is dropped from the out of the system. The module below deletes Mobile Users from the system.

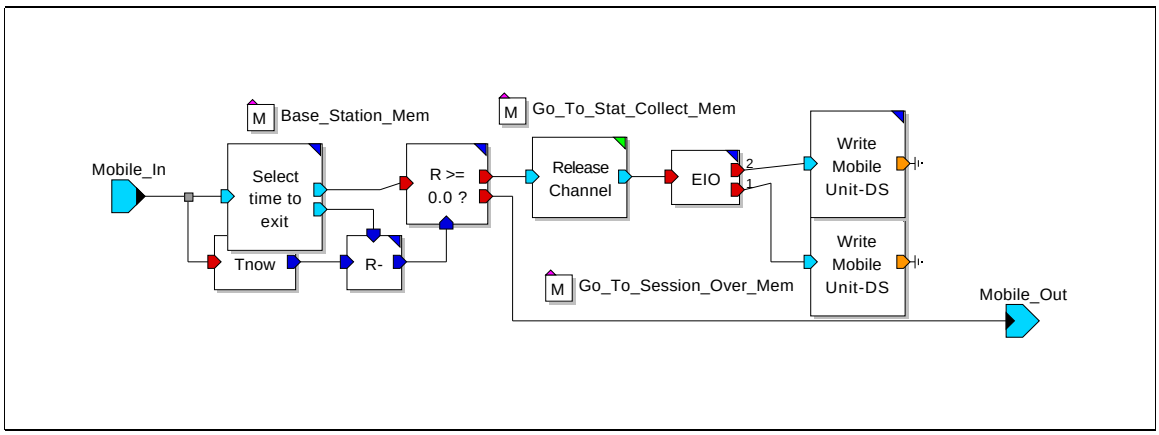

Figure 8: Delete expired mobile users

For the Mobile Users within the coverage area, channel quality is checked. If the channel quality is good even after the Mobile User's move, then the old Base Station remains servicing the user. If the quality of the channel is unacceptable (i.e., the Mobile Users is too far from the assigned Base Station,) the user will be assigned another Base Station and channel.

The output graphs below shows the movement of the Mobile Users while they are using the system and the base station grid.

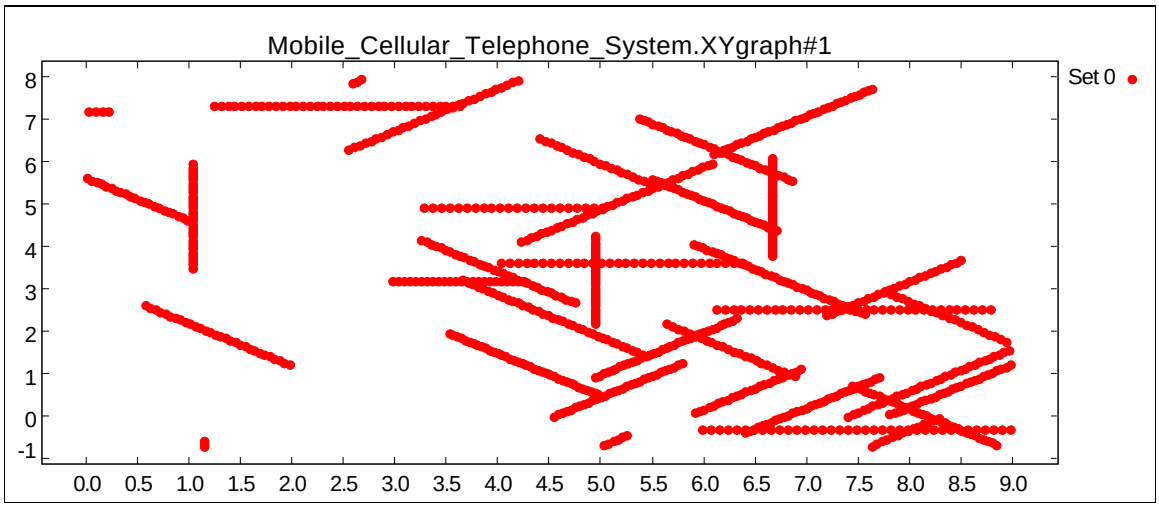

Figure 9: Mobile user movement

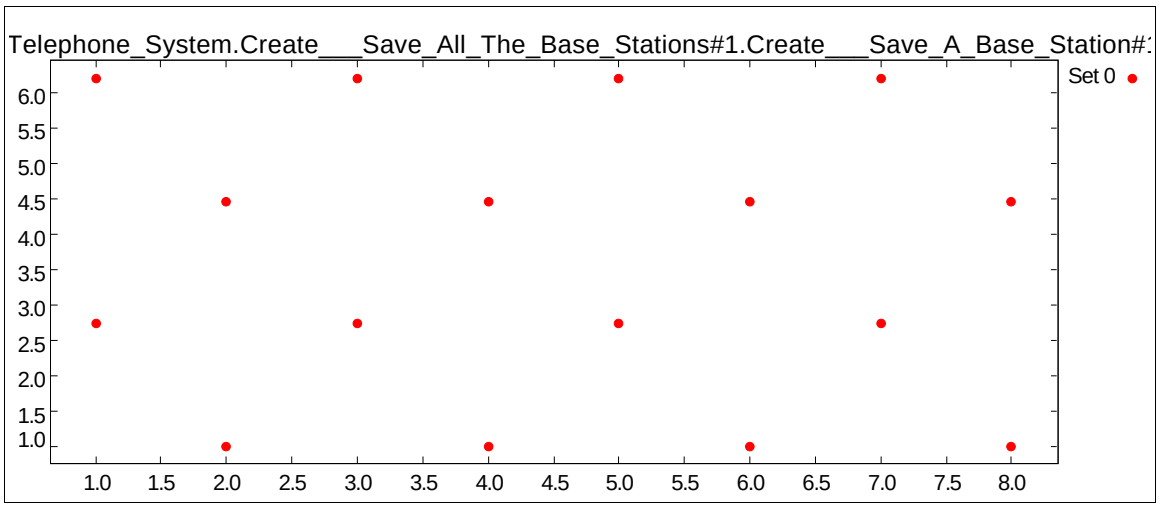

Figure 10: Base station grid